" S P A R K S "

THE NORTH SHORE AMATEUR RADIO CLUB INC.

FEBRUARY EDITION 1980

EXECUTIVE AND OFFICERS:

President	Don Cole	VE3HYW	985-8197
Directors	Cy Hamilton	VE3LET	263-2157
	Gord MacDuff	VE3AMQ	263-8386
	John Pluister	VE3FGL	655-4269
	Steve Wotton	VE3CFG	725-4197
Treasurer	Hank Verwoerd	VE3FHV	686-1382
Secretary	Gord MacDuff	VE3AMQ	263-8386
Registrar	John Pluister	VE3FGL	655-4269
Get Well Cards	Ted Brant	VE3ADD	668-3561
Editor	Gunter Bohlken	VE3LHM	263-2180

NEXT MEETING:

The next meeting will be held in the cafeteria of the O'Neill Collegiate at 8:00 pm on Tuesday, February 12. Lorne BJB and Bernie ATI have arranged for a film on the microwave relay system entitled, "A Nation In Touch" courtesy of Bell Canada.

The first meeting of the year was well attended and we are grateful to Don HYW for providing us with a film on a moment's notice. The film, on computers, narrated by Walter Cronkite, was enjoyed by all who attended. (I'm sorry I had to miss it--ed)

NEWS:

- We are compiling a list of hams who are willing to serve on an EMERGENCY NET. If you are able to participate you should have: 1) a portable antenna, 2) a transceiver with VE3OSH and 146.52 Simplex frequencies, and 3) a power-supply that can be plugged into a 120 V AC outlet.

  The net is intended to serve during emergencies by co-ordination between the different services such as the Red Cross, Police, Fire Departments, Ambulance etc. If you can meet the above requirements, we urge you to place your name on the list so that we can draw on the list of names should an emergency arise. Notify any of the executive members, their phone numbers appear at the top of this page, or mention it to a member of the executive at the next meeting.

NEWS cont'd

- In last month's bulletin we mentioned the North Shore Amateur Radio Club award. Here are the requirements:

  VE3's contact 25 N.S.A.R.C. members in good standing.
  Stickers for each additional ten members.

  For the rest of Canada & 48 U.S.A. contact 8 members.
  Stickers for each additional 5 members.

  All others (DX) contact 4 members.
  Stickers for each additional 2 members.

  All contacts must be made on the H.F. bands (30 Mhz and below). Send GCR list to:

  The N.S.A.R.C. Inc.
  c/o Hank Verwoerd, VE3FHV
  P.O. Box 171,
  Oshawa, Ont.
  L1H 7L1

- New Award Don HYW has offered an award for working the club's president on the H.F. bands. Any club member who catches Don on the H.F. bands and has a QSO with him is eligible. Of course there will be no pre-arranged meetings for this one, you have to catch him. Should be fun.

- Last call to any of our members who have not yet renewed their membership. We would like to have your call and name appear on the club roster which is now being prepared in call-sign alphabetical order by Mac IKG. We extended the deadline to our February 12 meeting.

- Just a reminder--there will be a fleamarket at the March club meeting.

- The code improvement class sponsored by the "Mod Squad" and held on Wednesdays at the Eastdale Collegiate is coming along fine though there are still a few seats open.

- Speaking of code practice, perhaps some of the new Hams are not aware of the W1AW Qualifying Runs. Eric HMG pointed out at the January 23 code practice class that a Qualifying Run was coming up on Jan. 25 (which we enjoyed). The next one is on February 12, at 10 pm (after the meeting). You'll find the details in the January issue of QST page 92 and 95.

THE MISSISSAUGA EVACUATION

As many as a hundred and seventy-five hams contributed their time and effort to the amateur radio service provided by local hams under the direction of Rod Pears VE3IXB during the Mississauga evacuation. Ralph VE3CRK, Don VE3HYW, Ralph VE3KDN and Evan VE3IND were some of the club members who, as in most cases, gave up long hours of sleep in order to serve.

The following is a quotation from a draft report prepared after the Mississauga '79 evacuation.

"....In 19 hours, three large active-treatment hospitals and six nursing homes, containing approximately 2000 patients, had been evacuated without a single untoward event. (This included ten intensive care patients, and 62 patients who had to be moved twice). This had been achieved with resources from Federal, Provincial and Municipal agencies, the facilities of approximately 25 hospitals and nursing homes, and ambulance and public transit services from 25 communities outside the evacuated area.

"At 1600 hrs, the amateur radio operators emergency network was activated for round-the-clock operations. At 1900 hrs, they were asked by the Red Cross to assist in establishing communications between reception centres and Red Cross Headquarters, as telephone lines were completely jammed. Twelve stations were established, including a "net control" station which were manned by 175 operators on 6-8 hour shifts. There were two operators in each evacuation centre, and five at Red Cross Headquarters. (The network operations were carried on continuously (operators taking leave from their normal work to do so), and terminated at 2359 hrs Wednesday). The COMSONT net, involving 60 stations, was also in operation, passing emergency messages between Municipalities throughout the Province, and with U.S. networks...."

Our thanks to Steve CFG for sending us this draft report extract. If you care to read more about the hams at the Mississauga madness, I recommend you read the dramatic story by Mike Goldstein VE3GFN entitled Hams At Mississauga Madness in the January issue of Electronics Today.

Rod Pears VE3IXB, is the Emergency coordinator for the evacuation area and Mike VE3GFN, being the Emergency coordinator for the Toronto area had his fingers on the pulse and wrote a very comprehensive story.

REPORT OF ACTIVITIES OF THE NORTH SHORE AMATEUR RADIO CLUB TWO METRE NET

In the first report of the new year I am pleased to say that net attendance is continuing at a satisfactory level, the average nightly attendance for January holding at 45.2 check-ins. It also is encouraging to note the steady increase in traffic combined with spot announcements of up-coming events. These things in addition to the excellent spirit of friendship present all help to justify the use od "Good Old O S H" each Thursday night. It is hoped that all who wish to "break-in" to set-up off-frequency meetings with others will not hesitate to do so at the appropriate breaks.

Bob, VE3HNH, and his capable helpers, we'll keep it clean, Bob, we won't even mention Murphy, have established the C/W practice session at 9:00 P.M. and from all comments heard the feature is well received. Good show, Bob.

High Society Notes: During the month it was my pleasure to have visits from Gunter, VE3LHM, and Bill, VE3KZL, Fred, VE3HE, Reno VE3KQE, Bernie, VE3ATI, Roy, VE3AAF, Evan, VE3IND, and Vic, VE3ANX, several of whom brought along groups of Dominion Store tapes which were appreciated. The collection of tape is growing, and this is my usual monthly appeal for more. The Club Executive is going to come up with a worth-while objective (Aren't you?), and we want to be able to swamp them with tapes. I will shortly call for a volunteer who can scrounge a tape-recording tabulator to do some totalizing. Electric preferred of course, but beggars can't be chooses! Getting back to my visitors-- It was most enjoyable just to sit and chat about old-times, as well as the present.

And to close, my usual thank you to all who in any way help to make the net a success, best wishes to all who are working on their tickets, and a warm welcome to all to "Check-In"

73 and 88, Perce, VE3AEX, Net Control.

* * * * *

The reciprocal license to operate in the U.S. is no longer needed as of January 27, 1980. Milt QN and Bill KZL were having a QSO the other day on 75 metres discussing this subject when George Wilson VE3GEW of the D.O.C. kindly broke in and assured them that it was now official. As Milt QN mentioned on two metres (Where I gleam some items for the bulletin--ed), it is a good policy to take along the blue customs card with a record of your equipment as well as a photostatic copy of your station license.

I.C. CORNER

ATTENTION ... You people who only know about tubes ...(others included)

This is the beginning of what I hope to be a long running monthly series on EXTREMELY SIMPLE circuits one can build with EASILY obtainable parts. (Means not having to drive to Toronto if you don't want too !) No great emphasis will be placed on how the cicuits work, just on how to make them work.

SOUND NEAT ? ... Read on ...

To begin, a timely circuit (no pun intended) centres around the Mod Squad activities. Below is the cicuit of a code oscillator. Yes, believe it or not it is! The circuit is taken from the 1975 RADIO AMATEUR'S HANDBOOK (pg.12, 52nd edition). For some unknown reason, the circuit is not in more recent issues of the Handbook, but yes it does work!

The heart of the circuit is the popular 555 I.C. Timer. All parts are EASILY obtainable at a local electronics' store BUT most should be lying around in your junk box. Just be sure to blow the dust off the components before you solder them, (It works better that way Hi Hi).

The component layout is NOT critical so a printed circuit board is NOT required. In fact, this circuit would be an ideal one for you XYL's to build. (REALLY!)

A small I.C. socket is advised for the 555 since too much heat from those ol' 100 watt irons is not good for its health! If you have an iron of about, 30 watts, it will do fine.

Many of these cicuits have been built and are working fine. How does it work ? Well, as I said earlier I would not go into great detail, (actually I don't know). Anyway, the 555 does all the work producing a square-wave type output to the speaker (square what ?). Variable resistor, R2, works together with capacitor, C2, to yield the frequency (tone) of the oscillator. It allows adjustment of the tone to a comfortable pitch, (Neat Huh?). Variable resistor, R3, controls the output level to the speaker and is appropriately labelled "Volume", (Amazing!). Those are the main components we need to be concerned with since they are the ones you can diddle with to impress people. R2 and R3 could be replaced with fixed values of resistors, just experiment with different values until the tone and volume is "just right". I suggest the use of "pots" since everybody's CW copying "Ear" is different.

Note that the supply voltage can range from +4.5 to +18 volts D.C. This means the unit can operate off a standard, EASILY obtainable 9 volt battery or if you like to send CW while driving, it will work off +12 volts D.C. as well, (Isn't science wonderful ?). Switch, S1, is any SPST,SPDT,DPST, or DPDT type, (SPSSSS ??? --- ON-OFF switch ... "Ahhhh!").

Well, that's about it. Try and keep the supply voltage above +6.0 volts, I have found they work nicer around +9.0 volts, (there's that 9 volt battery again !) Have fun and get your XYL in on this too!

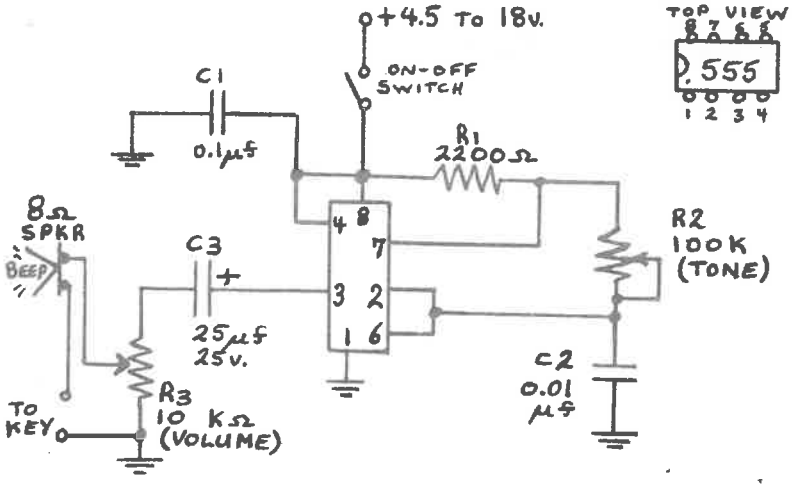

73 & Good Luck ! ...

VE3EPY

(Psssssst! ...
just wait till next month!)

FOR SALE OR WANTED

All listings will appear in the first bulletin after they are turned in and will be reprinted in the next two bulletins unless deleted.

FOR SALE: SB 104-A complete with - 500 Hz CW Filter
- DC Power Supply (Plugs into AC)
- Speaker
- Microphone

$1200.00 or best offer. Phone 644-5336 between 8 am and 4 pm or phone 655-4269 after 5 pm, John Pluister VE3FGL

National NCX3 - 3 bands, with Heathkit power supply HP23B - $225.00
Wilson Mark II 6 chan. Handheld, high - low power, touchtone, two battery packs, charger, heavy carrying case. $300.00
Call Bill VE3KZL at 263-2969

Quart size dummy load, 100 watts output maximum.
Call Mac VE3IKG at 723-8484

A six-meter transverter - FTV650, $175.00
An SSB-CW filter - SL55, $50.00
also an MFJ CW filter, $20.00
Call Vic VE3LNX at 983-5831

A Johnson Viking Ranger transmitter - 160 through 10 meters, CW - AM, with antenna relay.
A Realistic DX-160 receiver.
Call Gunter VE3LHM at 263-2180

WANTED: Anyone knowing a source for 6 to 8 fibre glass rods 12 to 15 ft. long - suitable for a quad, please call Charlie VE3IBO at 668-7481

Anyone knowing a source for fibre optics please call Richard Bohlken at 263-2180

Canadian Motorola model CL43GGB-3100B service manual or schematic diagram or a copy of same. Pleas call Gunter VE3LHM at 263-2180

73, Gunter LHM